RoHS

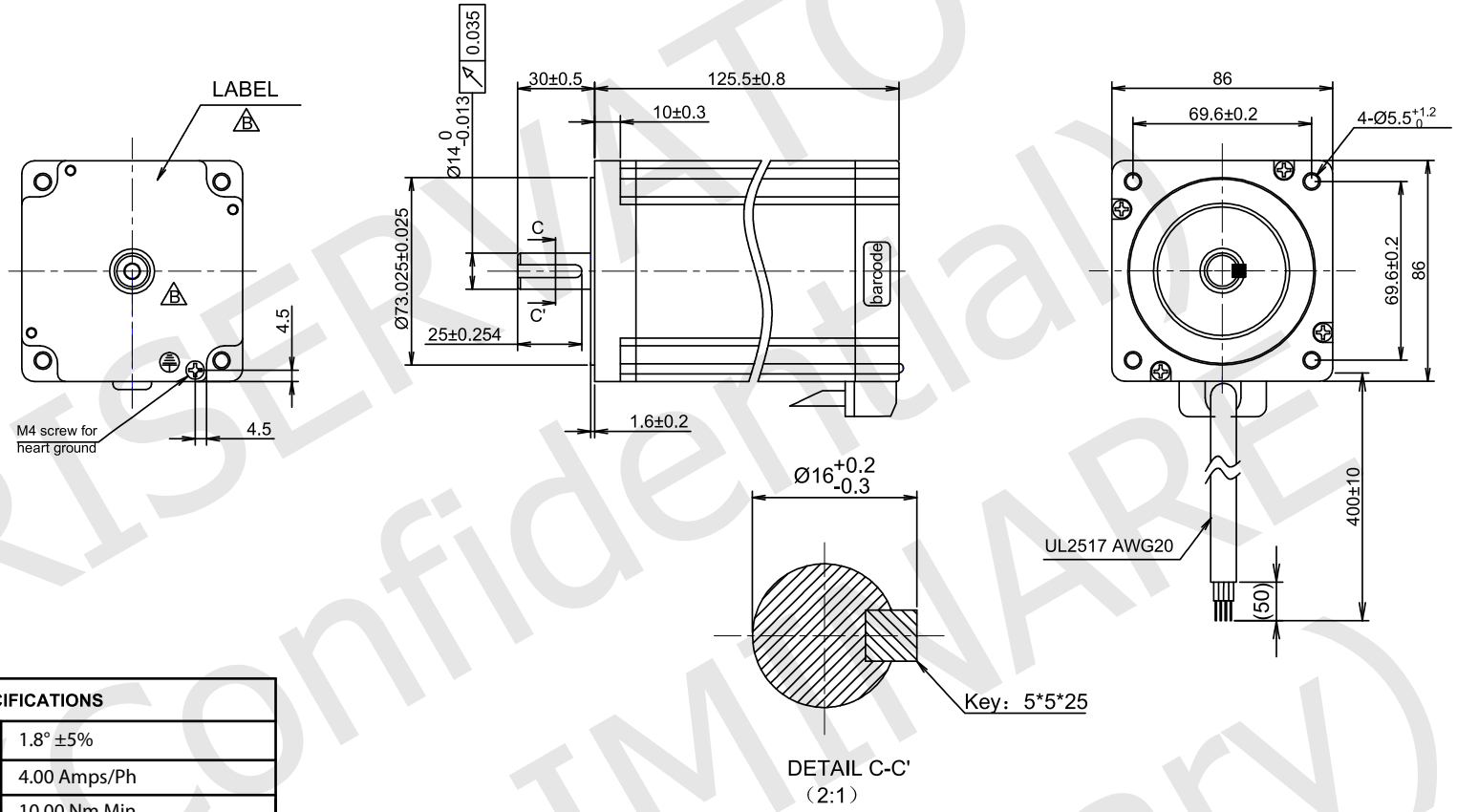

MOTOR SPECIFICATIONS	
STEP ANGLE	1.8° ±5%
RATED CURRENT	4.00 Amps/Ph
HOLDING TORQUE	10.00 Nm Min.
RESISTANCE	1.20 ohm ±10% at 25°C
INDUCTANCE	11.00 mH ±20% at 1kHz,1Vrms
ROTOR INERTIA	4000 g.cm²
INSULATION CLASS	Class F, 155°C
DIELECTRIC STRENGTH	1500 Vac 1 minute
IP CODE	IP20
PULL OUT TORQUE	---
BACK EMF	---
DETENT TORQUE	---
WEIGHT	4250 g. approx
TEMPERATURE RISE	105K Max.
OPERATING TEMPERATURE	-20°C ~ +50°C
STORAGE TEMPERATURE	-20°C ~ +70°C
SHAFT AXIAL LOAD	60 N
SHAFT RADIAL LOAD	220 N (ON THE SHAFT END)

WIRING DIAGRAM

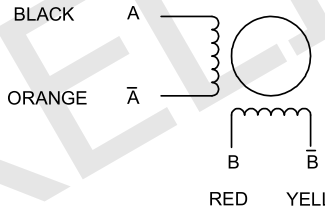

EXCITING SEQUENCE(TWO PHASES) VS.DIRECTION OF ROTATION

STEP	A	B	Ā	B̄
1	+	+	−	−
2	−	+	+	−
3	−	−	+	+
4	+	−	−	+

CW ↓ ↑ CCW

CLOCK WISE VIEW FROM MOUNTING SIDE

LABELS

YYWWXXXXX (25 x 8)

Stator barcode label

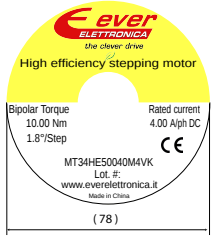

UNIT: mm

UNLESS OTHERWISE SPECIFIED TOLERANCES

DIMENSIONS : ±0.3 mm DEGREES : ±5%

DRAWING NOT TO SCALE

DESIGN	Stm02158-00b
CHECK	
APPROVED	
DATE	12 / 10 / 2020

REV	
	00b - First release.

MT34HE50040M4VK

STEPPING MOTOR SPECIFICATION

ever ELETTRONICA
the clever drive

www.everelettronica.it

RISERVATO (Confidentially PRELIMINARE (Preliminary)