EVER s.n.c. di ING: CALDI &

Via del commercio 2/4
26900 Lodi –Italy
tel. +39-0371-412318
fax +39-0371-412367
mail

web www.everelettronica.it
infoever@everelettronica.it

MOTOR TECHNICAL SPECIFICATION

M-06-STP

Red. : Bianchi Mario

Doc: **MTEN-0118 – 00**

Date : 29/06/2018

Motor Size	**4.2" – 110 mm square shape**	Step Angle	**1.8° ±5%**
Front Shaft	**45.0 mm length - Ø 19.05 mm with key 4.75x4.75x34.93 mm**	Rear Shaft (used by encoder)	**13.5 mm length – Ø 6.35 mm**
Lead wires	**# 8 lead wires**	Lead Wire Length	**400 ±10 mm**
Rated Voltage	**6.58 Volt**	Rated Current	**7.00 Amps/phase**
Resistance	**0.94 ohm ±0.15**	Inductance	**9.45 mH ±20%**
Winding	**Unipolar for bipolar serial and parallel connection**	Bipolar Holding Torque	**30.00 Nm min.**
Rotor Inertia	**16200 g.cm²**	Insulation class	**Class F, 155°C**
Ambient temperature	**-20°C ~ +40°C**	Temperature rise	**105K max**
Shaft thrust load	**60 N**	Shaft radial load	**220 N (at front shaft end)**
Encoder type	**Incremental quadrature**	Encoder code	**SE460400AA10030**
Outputs	**Single ended 24 Vdc**	Encoder power supply	**24 Vdc ±5%**
Output Signals	**A, B, Z.**	Encoder resolution	**400 ppr**

Mechanical drawings **(Dimensions in mm)**

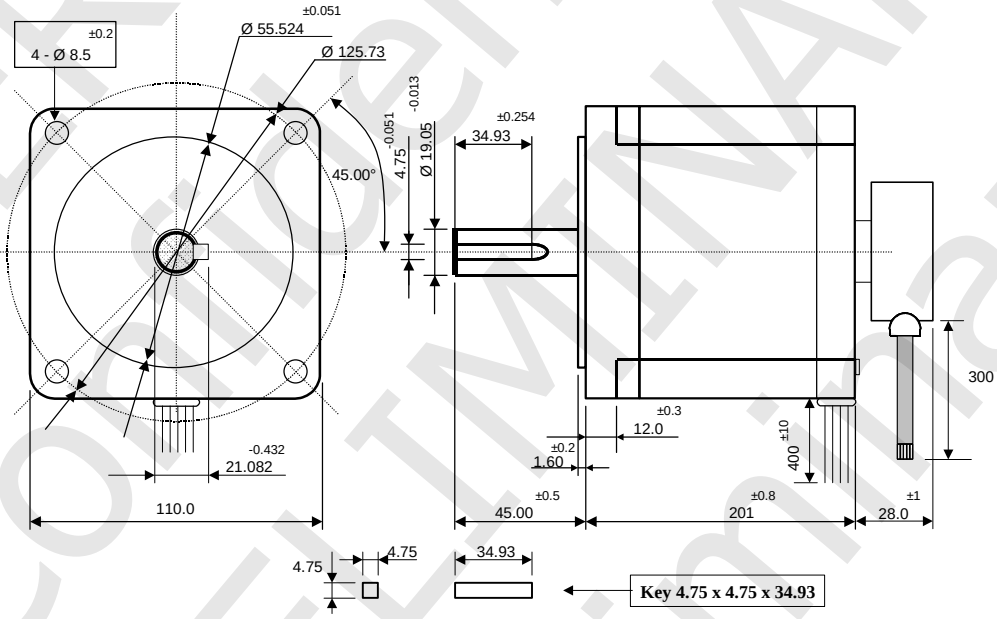

Connection lead wires color diagram

Motor connection

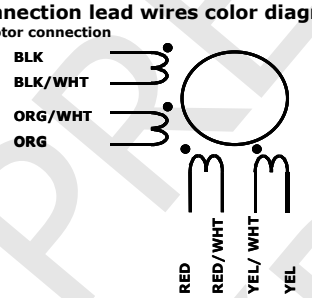

Rear flange

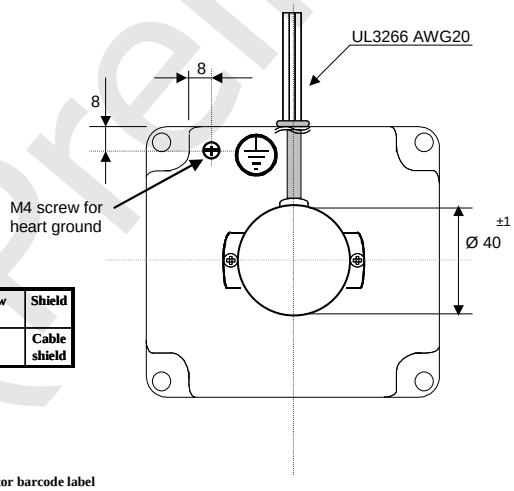

Encoder connection

Lead colours	White	Black	Red	Green	Yellow	Shield
Connection	Vdc	0V	A	B	Z	Cable shield

Motor Labelling

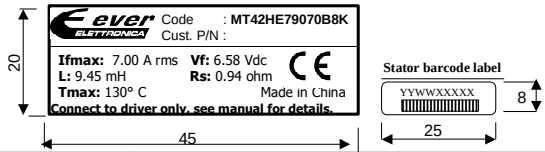

	MOTOR SPECIFICATION: MTEN-0118	**DATE:** March, 12th 2018	**CUSTOMER APPROVAL:**
	EVER P/N: MT42HE79070B8K		CUSTOMER CODE:

RISERVATO (Confidential) PRELIMINARY (Preliminary)